Design, Testing and Qualification of MUSIC Propulsion System for ELITE Small Satellite Mission to Very Low Earth Orbit

IEPC-2024-583

Presented at the 38th International Electric Propulsion Conference, Toulouse, France
June 23-28, 2024

Matteo Laterza*, Divya Agarwal†, Nunki Pontianus‡, Wei Xuan Justin Ong§,
Suryono Gunawan Ali¶, Kai Sheng Khoo‖, Wei Jian Joshua Lim**,
George-Cristian Potrivitu††and Jian Wei Mark Lim‡‡
Aliena Pte. Ltd., Singapore 486006

Very low earth orbits are a promising new area of exploration for cost-effective satellite solutions. Operations in these orbits require high thrust-to-power propulsion systems suitable for microsatellites. Singapore's Extremely Low orbit Imaging and Technology Exploration (ELITE) mission is positioned to explore this space in 2025, and Aliena is providing it with the MUlti–Stage Ignition Compact (MUSIC) propulsion system. This work examines the design tradeoffs and testing approaches necessary to balance the requirements of such a mission.

I. Introduction

Very Low Earth Orbit (VLEO) operations have a clear advantage for Earth observation applications, where a lower distance from the target can greatly improve data quality, or allow cheaper sensors to obtain resolutions comparable to state-of-the-art platforms. There have been only a few pioneering missions in VLEO such as GOCE[1] and SLATS.[2] These missions however involved platforms with masses in excess of 400 kg. Smaller and cheaper platforms are required to fully capitalize on the advantages of VLEO. This would allow for VLEO constellations to add fast revisit rates to the resolution advantage, and add the possibility of multi-sensor data acquisition. A less expensive platform would also be able to offset the limited lifetime of VLEO operation and allow for next-generation satellites to be refreshed with the latest sensor technologies. Singapore aims to spearhead the VLEO small satellite exploitation with the Extremely Low orbit Imaging and Technology Exploration (ELITE) mission.

The ELITE mission is carried out by a consortium of Singaporean academic and industrial entities. Aliena is in charge of the propulsion system while the bus architecture and project management are the responsibility of the Satellite Research Center at Nanyang Technological University, Singapore. The mission grant was awarded in 2021, with the ambitious goal of launching in early 2025 and reaching VLEO operation before the end of that year. Program management reflects the commercial vision of the project, with rigid deadlines and a design-to-cost approach. Mission requirements led to a flexible design with full redundancy for a critical system such as the propulsion, while the use of commercial-off-the-shelf (COTS) components was generally allowed given the forgiving radiation environment present at very low orbits. The VLEO

*VP for Research and Development, matteolaterza@aliena.sg.
†Space Systems Engineer, divya.agarwal@mda.space (currently at MDA Space).
‡Space System Engineer, nunkipontianus@aliena.sg.
§Space Systems Engineer, justin.ong@aliena.sg.
¶Space Systems Engineer, suryono_ali@aliena.sg.
‖Space Systems Engineer, kaisheng@aliena.sg.
**Head (Operations), joshualim@aliena.sg
††Chief Technology Officer & Co-founder, georgepotrivitu@aliena.sg.
‡‡Chief Executive Officer & Co-founder, marklim@aliena.sg.

Copyright 2024 by the Electric Rocket Propulsion Society. All rights reserved.

environment is dominated by the necessity to limit drag, and consequently the solar array size. Thrust-to-power is therefore the main performance metric for the propulsion system, set as 3mN minimum thrust with a maximum 100W of input power. The ELITE propulsion system is based on the MUlti–Stage Ignition Compact (MUSIC) Hall thruster developed at Aliena.[3,4]

II. Requirements

The ELITE program has a variety of objectives, both scientific, technological, and commercial. These goals are condensed by the mission prime contractor into Level-0 mission requirements. These requirements then cascade into more detailed level requirements for the different subsystems.

Table 1 lists some of these requirements, and specifically those that affect the design of the propulsion system. Two pairs of requirements highlight the main tradeoffs needed in the design: 001, in conjunction with bus design, translates into a thrust requirement, while 002 limits the available power. On a program level, 007 calls for rigorous testing standards, while 006 calls for a decidedly aggressive timeline. The rest of this document will delineate how these tradeoffs were navigated.

Table 1: ELITE Level-0 mission requirements affecting propulsion design.

Identifier	**Requirement**
0.MIS-001	Demonstrate maintenance of VLEO flight (250 - 350 km) for 1 year
0.MIS-002	Thruster should operate optimally in VLEO with 100 W of power
0.MIS-006	The spacecraft to be ready for launch by Q1-2025
0.MIS-007	The spacecraft shall be developed and tested following ESA/NASA standards

III. System Design

A. Architecture

The system architecture stems from the tension between aggressive timelines and reliability concerns. The team at Aliena tried to capitalize as much as possible on the experience accrued during the STRIDER mission.[5,6] The ELITE mission, however, is an operational mission, and not a technological demonstrator, so the reliability standards are much higher. This problem was tackled with a two-pronged approach: on the one hand, it was decided at an early stage to require a fully redundant system at every level, on the other, those subsystems that showed criticality were redesigned and tested specifically.

The resulting architecture is shown in Fig. 1. Two thruster units (TUs), each with redundant cathodes, are fed by a doubly redundant propellant management assembly (PMA) and are powered by a power processing unit (PPU) with dissimilar redundancy. The PPUs include modules for the anode and cathode keeper as well as the cathode heater (CH PPU). A cross-feed system is in place for both the PPU – through the Switch Board – and PMA, with non-latching switches and valves ensuring that the unpowered configuration is still a valid firing configuration.

The whole system is controlled by two electronic control units, both able to control the whole system, with ECU2 in cold standby. Lastly, a Single Mating Distribution Module (SMDM) is in charge of the interface connectors between the satellite bus, namely the onboard computer (OBC) and electrical power system (EPS), and the different subsystems.

B. Thruster Unit

The core of the propulsion system is of course the TU. The MUSIC-HM (Hot Mode) thruster was already being developed in 2021 when the ELITE project was awarded. However, the thruster still needed significant development before the performance goals for the mission could be achieved.

The mission goal of 100 W total power was initially translated into 80 W discharge power at the TU. This estimate was later corrected to 75 W. Thrust levels were measured with a state-of-the-art thrust balance,[4] while lifetime tests are still ongoing.

Copyright 2024 by the Electric Rocket Propulsion Society. All rights reserved.

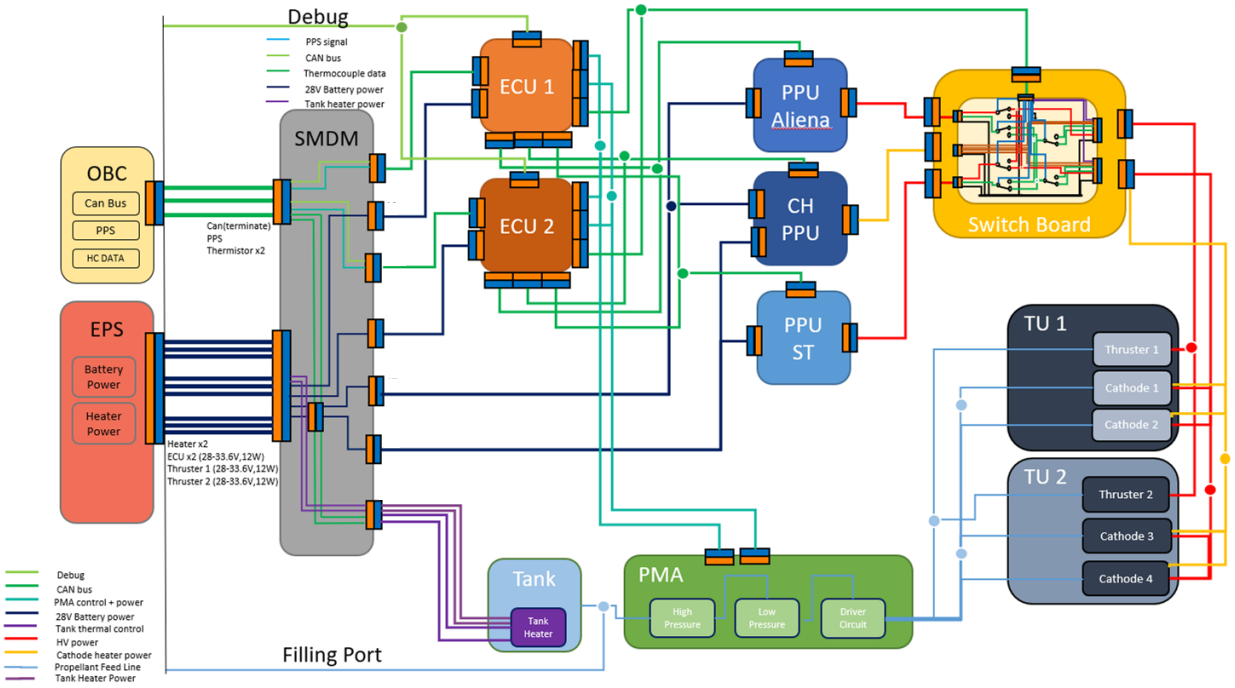

Figure 1: System architecture for the ELITE MUSIC propulsion system.

Table 2: ELITE MUSIC propulsion system TU specifications

Field	**Value**
Number of thrusters	2×TU with one anode and two cathodes each
Thrust (mN per TU)	3 at 80 W discharge power 2.7 at 75 W discharge power
Lifetime (hrs per TU)	3000



Figure 2: MUSIC-HM Hall thruster operating with Xe at Aliena's JPTF.

The MUSIC-HM TU comprises the *i)* anode, which functions also as the gas distributor, *ii)* ceramic discharge channel with annular and cylindrical regions, *iii)* magnetic system with permanent magnets and soft magnetic material, and *iv)* two 1 A-class hollow cathodes.[7] An image of the MUSIC-HM operating with Xe at Aliena's Jet Propulsion Test Facility (JPTF) is shown in Fig. 2.

Copyright 2024 by the Electric Rocket Propulsion Society. All rights reserved.

C. Propellant Management Assembly

The specific ignition sequence of the MUSIC-HM thruster requires flow adjustment in real-time across a relatively wide range.[8] The specifications are shown in Table 3 and the architecture of the PMA is shown in Fig. 3.

The propellant tank is the only single point of failure in the whole system. This is because a failing tank would most likely cause a loss of control in the spacecraft even if another tank was present. Downstream of it, two pressure regulators feed into isolation solenoid valves (Sol.). These valves protect the rest of the system in case of failure of one regulator and limit the total amount of propellant lost in case of a leak in the low-pressure segment. The two lines are then joined together so that one regulator can provide flow for all the channels.

Table 3: ELITE MUSIC propulsion system PMA specifications.

Field	Value
Number of channels	2×Anode 4×Cathode
Flow range (SCCM-Xe)	Anode: 3–25 Cathode: 0.3–2
Accuracy (SCCM-Xe)	0.1
Temperature range (°C)	-29 to 66
Failure tolerance	No single-point failure downstream of the tank

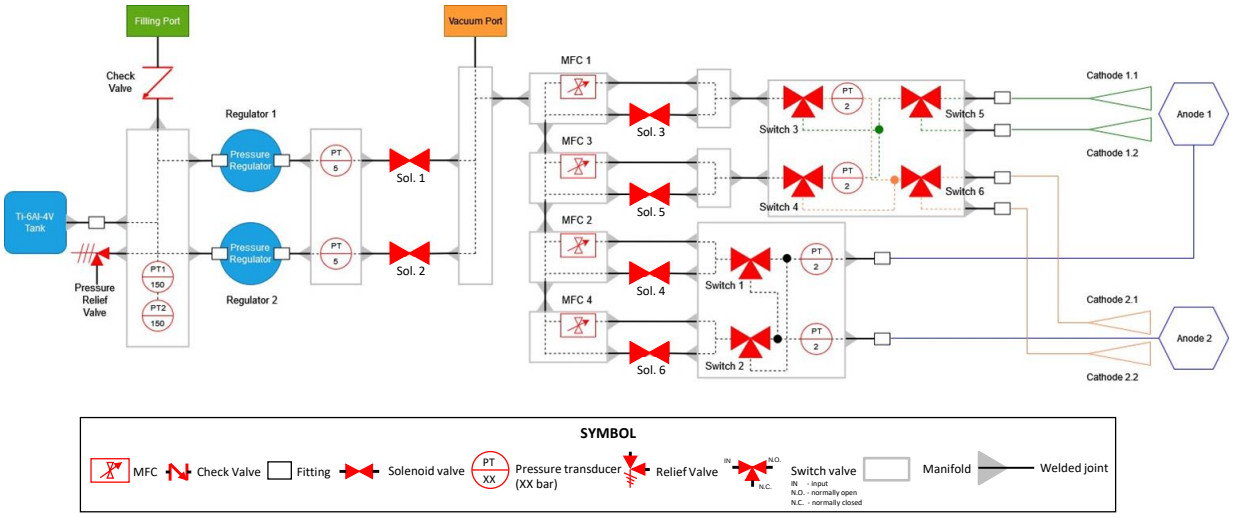

Figure 3: Architecture of the PMA.

The primary flow regulation system is composed of off-the-shelf miniaturized mass flow controllers (MFCs). Two of these are controlled digitally, while the other two are controlled in analog mode. These systems have been tested extensively in vibration and thermal vacuum campaigns in the past, but are not designed for space nor have any space heritage. A parallel backup system is provided by solenoid valves driven by PWM signals from the ECU. This secondary system has been tested with the TU in the laboratory but does not allow for accurate flow telemetry.

A series of non-latching valves (Switch) connect the flow control channels to the respective thruster units. An additional set of switch valves allows the selection between primary and redundant cathode. A number of pressure transducers (PT) are used to measure both high pressure levels upstream of the pressure regulators and low pressure levels downstream of the pressure regulators and flow regulation system.

Copyright 2024 by the Electric Rocket Propulsion Society. All rights reserved.

D. Power Subsystem

There are two main types of power processing units (PPUs) in the system. The high voltage PPUs provide power to the thruster anode and the cathode keeper. The heater PPU on the other end is a PWM controlled current source for the cathode heater. All these supplies share a common secondary ground but are isolated from the primary ground.

The Aliena high voltage PPU had been previously used for the STRIDER mission and is based on a third-party DC-to-DC converter. This converter features high switching times and is very robust and efficient while having a compact form factor. It has been subjected to vibration and thermal stresses in the past but, similarly to the MFCs, its radiation tolerance is unknown.[9] For this reason, an external entity would be providing a second high voltage PPU, using space-qualified components. This choice increased considerably the effort put into coupling tests between the PPU and the TU, but ensured dissimilar redundancy. The switch board setup of the PPU mirrors exactly the cross-feed valve setup of the PMA.

The heater PPU was redesigned to avoid noise present in the design for the STRIDER mission, and several protections were added. It was decided that, given the simplicity of the system, it was better to have four different heater PPU channels rather than two channels with switching capability between cathodes. Two pairs of heater PPUs share a radiation-tolerant step-down converter.

The power subsystem design is already laid out in the main diagram in Fig. 1. Since part of the system is external, all the different modules have separate casings and are connected through harnesses. The main specifications of the ELITE MUSIC propulsion system PPU are summarized in Table 4.

Table 4: ELITE MUSIC propulsion system PPU specifications. CC and CV refer to current control and voltage control, respectively, while PWM refers to pulse width modulation.

Field	Value
Number of channels	2×Anode
	4×Cathode Keeper
	4×Cathode Heater
Voltage range (V)	Anode and Keeper: 200–600 (selectable in flight)
	Heater: 12
Maximum current (A)	Anode and Keeper: 0.3
	Heater: 6 (average)
Control type	Anode: CC and CV
	Keeper: CC
	Heater: PWM
Temperature range (°C)	-29 to 43 at casing; maximum discharge power, steady state
Failure tolerance	No single-point failure

E. Control and Sequencing

Control is tasked to the redundant Electronic Control Units (ECUs). The system was too complex to have dissimilar redundancy in this system within a reasonable timeline. It was opted instead to utilize a radiation-hardened microcontroller unit (MCU) for this critical component.

IV. Testing

The testing philosophy was decided in close cooperation with the mission prime. Being a consortium, the ELITE team pools together members from the "old space" and "new space" communities, as well as members of academia. This brings to the table a great variety of perspectives but also creates the hard task of harmonizing different methodologies and approaches that can be quite entrenched.

The achieved compromise was to build three versions of the spacecraft: a flatsat, an engineering and qualification model (EQM), and a flight model (FM). The test flow is depicted in Fig. 4. The contradiction

Copyright 2024 by the Electric Rocket Propulsion Society. All rights reserved.

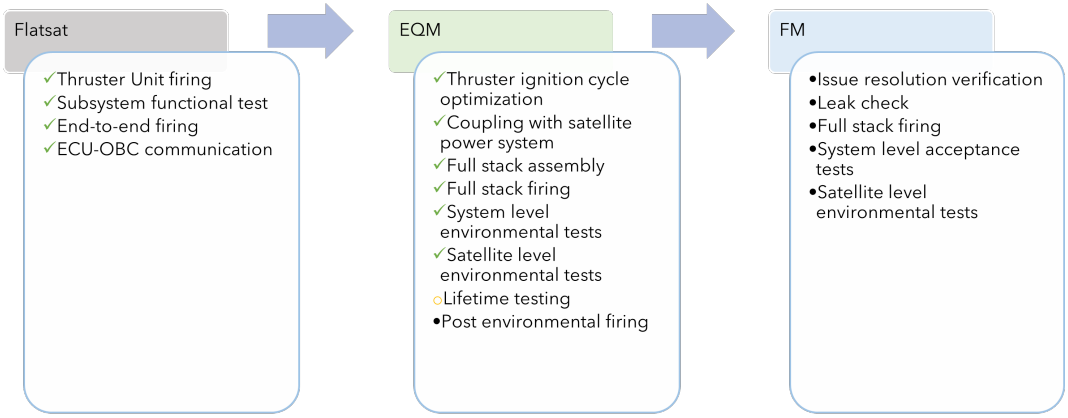

Figure 4: ELITE MUSIC propulsion system test flow. At the time of writing, the green tick signs denoted completed activities, the yellow empty circle corresponded to ongoing activity, and the black full circles denoted upcoming activities.

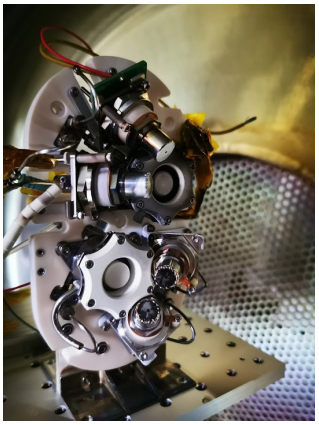

(a)

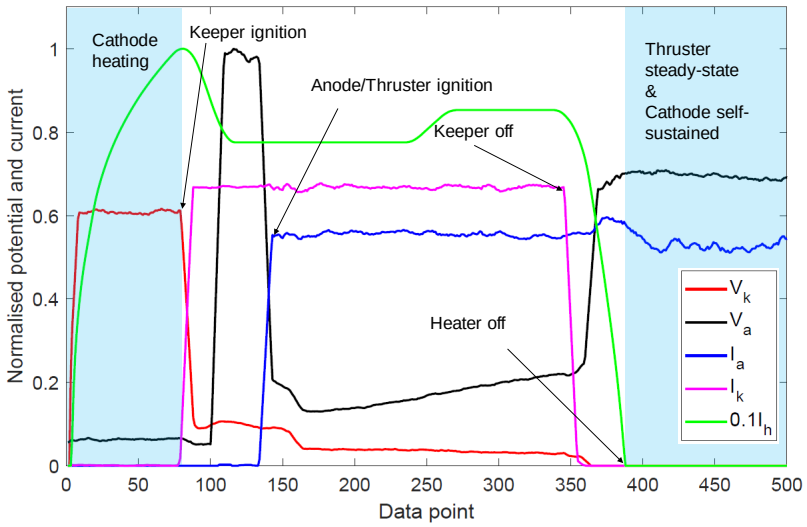

(b)

Figure 5: ELITE MUSIC propulsion system TU firing test: (a) setup at Aliena's JPTF and (b) telemetry during the TU ignition sequence.

in the term EQM is navigated by testing both the EQM and the FM at protoflight levels. As far as the launch provider is concerned, the mission is following a protoflight approach. This allows the team to gain the confidence that qualification testing provides, without overcommitting to freeze every minor detail before the FM. This flexibility is crucial to achieving the ambitious timelines of the project.

The spacecraft has recently completed its environmental test campaign for the EQM. The rest of the chapter will focus mainly on the propulsion system level testing.

A. Firing Test

The MUSIC thruster itself had already been tested in numerous configurations and using both laboratory power supplies and MFCs and prototypes of the PPU and PMA. The main goals of the thruster firing test were the following:

1. Validate smooth ignition with the EQM harness and TU architecture.

Copyright 2024 by the Electric Rocket Propulsion Society. All rights reserved.

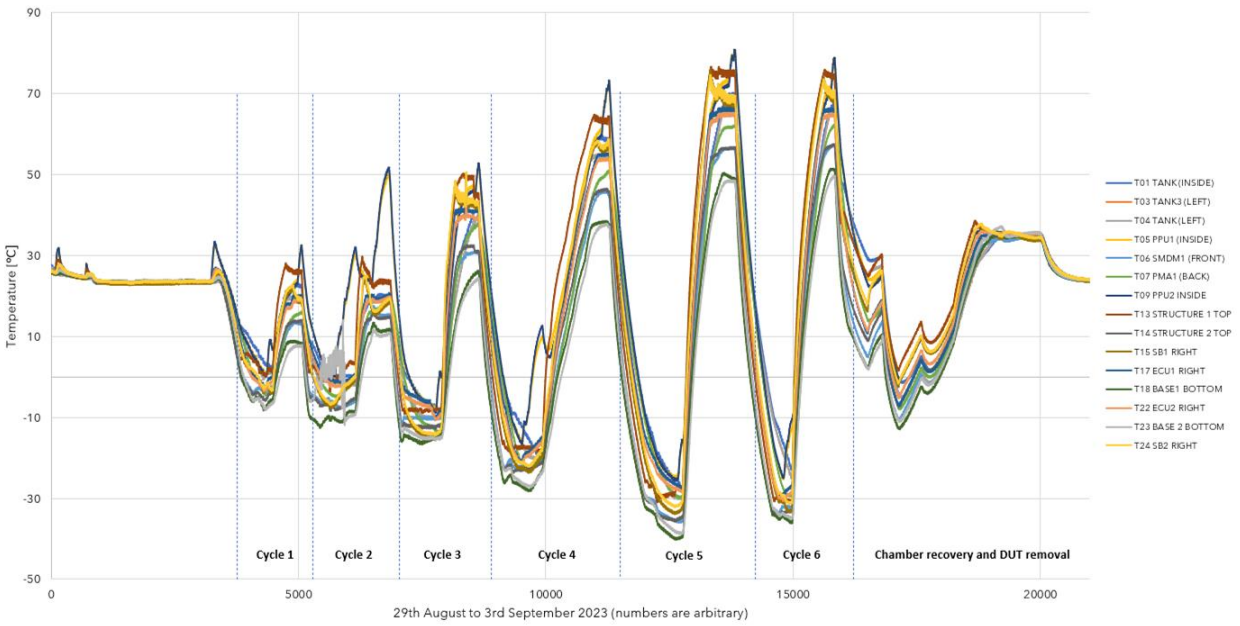

Figure 6: Temperature profile of the thermal vacuum testing of the ELITE MUSIC propulsion system.

2. Validate end-to-end propulsion system functionality.

3. Verify peak current draw at ignition to be within the pass values of the latching current limiter.

4. Verify thruster performance and total system power.

For the test, both TUs were assembled in the EQM configuration on Aliena's thrust balance, as shown in Fig. 5(a). The full stack of the propulsion system – without the propellant tank – was placed outside of the vacuum chamber while the TUs were placed inside the vacuum chamber and installed on the thrust balance. A xenon bottle was connected to the PMA through the tank interface. The firing command was then sent to the ECU and the sequence was monitored by the team as shown in Fig. 5(b).

The peak current was measured to be below 6A, and the thrust was measured at 3 mN for 110 W of total power. The TU was fired for a full firing cycle of 85 min. Figure 5(b) shows the telemetry during the firing test ignition sequence.

Following the test, the TU was removed from the thrust balance and assembled on the propulsion system, followed by the integration of the propellant tank. The system was then prepared for shipping to the environmental test facility at the Kyushu Institute of Technology, Japan.

B. Environmental Tests

1. Thermal Vacuum

Thermal vacuum testing consisted of six cycles. At the time of testing, there was still uncertainty on the satellite-level thermal load. The first two cycles were conducted at the predicted levels of -1 °C to +19 °C, while for cycles three to six the temperature was gradually increased to the SpaceX satellite level recommended test temperature range of -29 °C to +66 °C. These final cycles were marked as stress testing. Thermocouple data from the TVAC test can be seen in Fig. 6. During cycles 2 and 4 the PPU was loaded externally through a resistor to simulate the power consumption of nominal steady-state firing for 80 minutes.

Some minor anomalies were detected, particularly during the stress test, that led to slight modifications in the system before satellite-level testing. In general, the test was considered a success. Figure 7 shows the pass/fail matrix of functional tests (FTs) conducted during the test campaign. The tests FT0 and FTX were performed in atmosphere before and after the TVAC testing, respectively. The long duration PPU testing (LDT) was passed at the predicted nominal level, but it failed at hot stress levels. During LDT, no gas was

Copyright 2024 by the Electric Rocket Propulsion Society. All rights reserved.

	Anode V > 90% Vset	Cathode V > 90% Vset	Anode V < 50 V idle	Cathode V < 50V idle	Heater V > 90% Vset	1 Ω < Heater impedance < 2.5 Ω	1 bar gauge < Regulated Pressure 1 < 3 bar gauge	1 bar gauge < Regulated Pressure 2 < 3 bar gauge	Final tank pressure = initial tank pressure	Sol. 1 open	Sol. 2 open	MFC 1 flow	Sol. 3 flow	MFC 2 flow	MFC 3 flow	Sol. 5 flow	MFC 4 flow	Sol. 6 flow	
FT0	Pass	Pass	Pass	Pass	Pass	Pass	Pass	Pass	Pass	Pass	Pass	Pass	Pass	Pass	Pass	Pass	pass	Pass	Nominal
FT1	Pass	Pass	Fail	Pass	Pass	Pass	Pass	Pass	Pass	Pass	Pass	Pass	Fail	Pass	Pass	Pass	pass	Pass	
FT2	Pass	Pass	Pass	Pass	Pass	Pass	Pass	Pass	Pass	Pass	Pass	Pass	Pass	Pass	Pass	Pass	pass	Pass	
FT3	Pass	Pass	Pass	Pass	Pass	Pass	Pass	Pass	Pass	Pass	Pass	Pass	Pass	Pass	Pass	Pass	pass	Pass	
LDT1	Pass	Pass	Pass	Pass	Pass	Pass	Pass	Pass	Pass	NA*	NA*	NA*	NA*	NA*	NA*	NA*	NA*	NA*	
FT4	Pass	Pass	Pass	Pass	Pass	Pass	Pass	Pass	Pass	Pass	Pass	Pass	Pass	Pass	Pass	Pass	pass	Pass	
LDT2	Pass	Pass	Pass	Pass	Pass	Pass	Pass	Pass	Pass	NA*	NA*	NA*	NA*	NA*	NA*	NA*	NA*	NA*	
FT5	Pass	Pass	Fail	Fail	Pass	Pass	Pass	Pass	Pass	Pass	Pass	Pass	Pass	Pass	Pass	Pass	pass	Pass	
FT6	Pass	Pass	Pass	Pass	Pass	Pass	Pass	Pass	Pass	Pass	Pass	Pass	Pass	Pass	Pass	Pass	pass	Pass	
FT7	Pass	Pass	Fail	Fail	Pass	Pass	Pass	Pass	Pass	Pass	Pass	Pass	Fail	Pass	Pass	Pass	pass	Pass	Stress Test
LDT3	Pass	Pass	Pass	Pass	Pass	Pass	Pass	Pass	Pass	NA*	NA*	NA*	NA*	NA*	NA*	NA*	NA*	NA*	
FT8	Pass	Pass	Fail	Pass	Pass	Pass	Pass	Pass	Pass	Pass	Pass	Pass	Pass	Pass	Pass	Pass	pass	Pass	
LDT4	Fail	Fail	Pass	Pass	Pass	Pass	Pass	Pass	Pass	NA*	NA*	NA*	NA*	NA*	NA*	NA*	NA*	NA*	
FT9	Pass	Pass	Fail	Pass	Pass	Pass	Pass	Pass	Pass	Pass	Pass	Pass	Fail	Pass	Pass	Pass	pass	Pass	
FT10	Fail	Fail	Fail	Fail	Pass	Pass	Pass	Pass	Pass	Pass	Pass	Pass	Pass	Pass	Pass	Pass	pass	Pass	
FT11	Pass	Pass	Fail	Pass	Pass	Pass	Pass	Pass	Pass	Pass	Pass	Pass	Pass	Pass	Pass	Pass	pass	Pass	
FT12	Pass	Pass	Pass	Pass	Pass	Pass	Pass	Pass	Pass	Pass	Pass	Pass	Pass	Pass	Pass	Fail	Pass	Fail	
FTX	Pass	Pass	Pass	Pass	Pass	Pass	Pass	Pass	Pass	Pass	Pass	Pass	Pass	Pass	Pass	pass	Pass	Pass	

*No gas flow was regulated during LDTs to avoid arching and plasma discharge in the TVAC chamber. The items were not functionally checked.

Figure 7: Pass/fail matrix for the thermal vacuum testing of the ELITE MUSIC propulsion system.

Random vibration

X-axis		Y-axis		Z-axis	
f (Hz)	ASD ($g^2\,Hz^{-1}$)	f (Hz)	ASD ($g^2\,Hz^{-1}$)	f (Hz)	ASD ($g^2\,Hz^{-1}$)
20	0.03	20	0.03	20	0.03
200	0.16	40	0.06	40	0.06
230	0.06	160	0.06	700	0.06
260	0.14	180	0.08	800	0.21
360	0.14	400	0.08	1020	0.21
400	0.06	600	0.06	1300	0.03
600	0.06	700	0.16	2000	0.02
680	0.14	900	0.16	GRMS	11.88
900	0.14	1100	0.03		
1150	0.73	1250	0.03		
1300	0.73	2000	0.02		
1600	0.03	GRMS	10.98		
2000	0.02				
GRMS	19.21				

Duration (min): 1
Intensity levels: 25%, 50%, 100%

Figure 8: Random vibration testing levels of the ELITE MUSIC propulsion system. ASD stands for acceleration spectral density, f is the frequency, and GRMS is the root mean square acceleration.

flown in the TVAC chamber to avoid arching and plasma discharge. Therefore, the functionality of the flow regulation system was not tested.

It was decided together with the mission prime to repeat the test at a local TVAC facility at the maximum predicted environment plus 15 °C while using the PPU casing as reference temperature. The test was passed. This kind of flexibility highlights the advantages of the chosen testing approach.

2. Vibration and Shock

The vibration testing constituted of a random vibration test preceded and followed by a sine wave sweep for every axis. The loads presented in Fig. 8 were determined through the matching of simulations with the modal survey of a structural model of the whole spacecraft.

The response profile of the system to the sine sweep before and after vibration, presented in Fig. 9, shows good agreement, with variations in frequency and amplitude of the resonant peaks of less than 5%.

Figure 10 shows the pass/fail matrix for the FTs conducted during the vibration test campaign. The shock test was a stress-test and not part of the requirements for this mission. A few issues were encountered during the FTs and could all be attributed to harness issues, and ultimately workmanship. This led to

Copyright 2024 by the Electric Rocket Propulsion Society. All rights reserved.

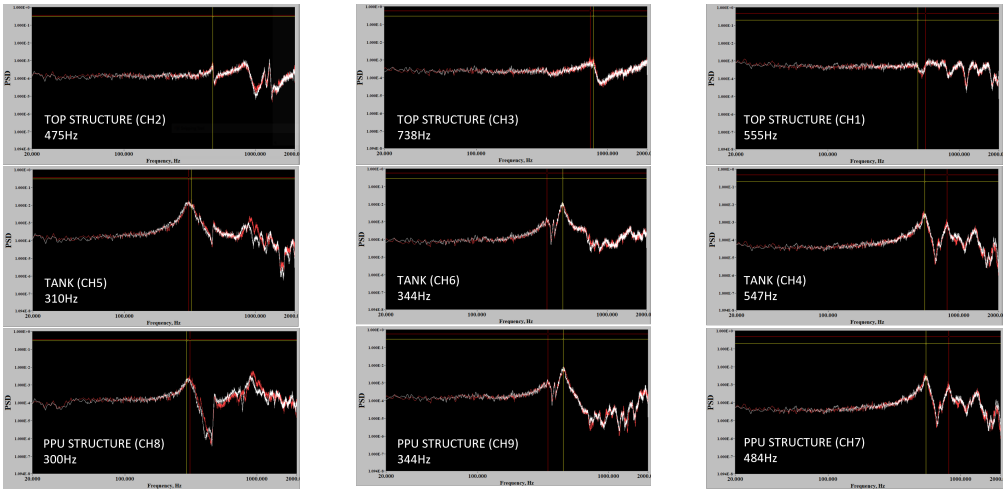

Figure 9: Response profile comparison before and after random vibration testing of the ELITE MUSIC propulsion system.

	Anode V > 90% Vset	Cathode V > 90% Vset	Anode V < 50 V idle	Cathode V < 50 V idle	Heater V > 90% Vset	1 Ω < Heater 1 impedance < 2.5 Ω	1 Ω < Heater 2 impedance < 2.5 Ω	1 bar gauge < Regulated Pressure 1 < 3 bar gauge	1 bar gauge < Regulated Pressure 2 < 3 bar gauge	No increase in He leak rate	Final tank pressure = initial tank pressure	Sol. 1 open	Sol. 2 open	MFC 1 flow	Sol. 3 flow	MFC 2 flow	MFC 3 flow	Sol. 5 flow	MFC 4 flow	Sol. 6 flow	Unchanged torque marks	Ceramic integrity	
FT0	Pass	Pass	ECU issue	ECU issue	Pass	Pass	Pass	SW issue	Pass	Pass	Pass	Pass	SW issue	Pass	Pass	Pass	Pass	Pass	Pass	Pass	Pass	Pass	
FT1	Pass	Pass	ECU issue	ECU issue	Pass	Pass	Pass	SW issue	Pass	Pass	Pass	Pass	SW issue	Pass	Pass	Pass	Pass	Pass	Pass	Pass	Pass	Pass	
FT2	Pass	Pass	ECU issue	ECU issue	Pass	Pass	Pass	SW issue	Pass	Pass	Pass	Pass	SW issue	Pass	Pass	Pass	Pass	Pass	Pass	Pass	Pass	Pass	**Y**
FT3	Pass	Pass	ECU issue	ECU issue	Pass	Pass	Pass	SW issue	Fail	Pass	Pass	Pass	Fail	Pass	Pass	Pass	Fail	Fail	Fail	Fail	Pass	Pass	
FT4	Pass	Pass	ECU issue	ECU issue	Pass	Pass	Pass	SW issue	NA*	Pass	Pass	Pass	NA*	Pass	Pass	Pass	NA*	NA*	NA*	NA*	Pass	Pass	
FT5	Pass	Pass	ECU issue	ECU issue	Pass	Pass	Pass	SW issue	NA*	Pass	Pass	Pass	NA*	Pass	Pass	Pass	NA*	NA*	NA*	NA*	Pass	Pass	
FT6	Pass	Pass	ECU issue	ECU issue	Pass	Pass	Pass	SW issue	NA*	Pass	Pass	Pass	NA*	Pass	Pass	Pass	NA*	NA*	NA*	NA*	Pass	Pass	
FT7	Pass	Pass	ECU issue	ECU issue	Pass	Pass	Pass	SW issue	NA*	Pass	Pass	Pass	NA*	Pass	Pass	Pass	NA*	NA*	NA*	NA*	Pass	Pass	
FT8	Pass	Pass	ECU issue	ECU issue	Pass	Pass	Pass	SW issue	NA*	Pass	Pass	Pass	NA*	Pass	Pass	Pass	NA*	NA*	NA*	NA*	Pass	Pass	
FT9	Pass	Pass	ECU issue	ECU issue	Pass	Pass	Pass	SW issue	NA*	Pass	Pass	Pass	NA*	Pass	Pass	Pass	NA*	NA*	NA*	NA*	Pass	Pass	**Z**
FT10	Pass	Pass	ECU issue	ECU issue	Pass	Pass	Pass	SW issue	NA*	Pass	Pass	Pass	NA*	Pass	Pass	Pass	NA*	NA*	NA*	NA*	Pass	Pass	
FT11	Pass	Pass	ECU issue	ECU issue	Pass	Pass	Pass	SW issue	NA*	Pass	Pass	Pass	NA*	Pass	Pass	Pass	NA*	NA*	NA*	NA*	Pass	Pass	**X**
FT12	Pass	Pass	ECU issue	ECU issue	Pass	Pass	Pass	SW issue	NA*	Pass	Pass	Pass	NA*	Pass	Pass	Pass	NA*	NA*	NA*	NA*	Pass	Pass	
FT13	Fail	Pass	ECU issue	ECU issue	Pass	Pass	Pass	SW issue	NA*	Pass	Pass	Pass	NA*	Pass	Pass	Pass	NA*	NA*	NA*	NA*	Pass	Pass	
FT14	Fail	Pass	ECU issue	ECU issue	Pass	Pass	Pass	SW issue	NA*	Pass	Pass	Pass	NA*	Pass	Pass	Pass	NA*	NA*	NA*	NA*	Pass	Pass	
FT15	Fail	Pass	ECU issue	ECU issue	Pass	Pass	Fail	SW issue	Pass	Pass	Pass	Pass	SW issue	Pass	Pass	Pass	Pass	Pass	Pass	Pass	Pass	Fail	**SHOCK**

*The items were not functionally checked.

Figure 10: Pass/fail matrix for the vibration and shock testing of the ELITE MUSIC propulsion system.

improvements on the harness design and setup procedure, as well as ensuring that the team has sufficient time for careful installation during FM integration.

V. Future Timeline

Satellite-level EQM testing was completed in June 2024. Data analysis is underway but preliminary results hint at a successful test. Next, the propulsion system FM firing test is to take place in September 2024, followed by protoflight level acceptance tests in November 2024. Lastly, the satellite-level FM acceptance test is planned for February 2025, with launch scheduled in October 2025 on a Falcon 9 Rideshare.

VI. Conclusion

Very Low Earth Orbit is a very promising application for electric propulsion in general and high thrust-to-power microsatellite propulsion in particular. Singapore's ELITE mission is positioning itself to be an early explorer of this space with VLEO operations in 2025. Aliena's development and testing of the mission's MUSIC propulsion system can bring valuable information to the members of the electric propulsion community intending to partake in this field.

Copyright 2024 by the Electric Rocket Propulsion Society. All rights reserved.

Acknowledgements

The authors would like to thank Singapore's Office for Space Technology & Industry (OSTIn) for the generous contribution to funding the development of the MUSIC propulsion system for the ELITE mission.

References

[1]A. Caramagno, M Lange, J Gonzalez, and G Saccoccia. Application of electric propulsion to the gravity and ocean circulation explorer (GOCE) mission. In *Proceedings of the 32nd Joint Propulsion Conference and Exhibit*, page 2721, 1996.

[2]H. Kawasaki, K. Konoue, H. Hoshino, Y. Kaneko, and M. Sasaki. Interim report of super low altitude satellite operation. In *IGARSS 2018-2018 IEEE International Geoscience and Remote Sensing Symposium*, pages 4066–4069. IEEE, 2018.

[3]M. Laterza, G-C. Potrivitu, D. Agarwal, K.S. Khoo, N. Pontianus, J.W.M. Lim, E.H. Eunseo, S.D. Supriyadi, C. Li, L. Liau, P. Ramachandran, C. Tea, Z.K. Ng, S.H. Tsang, and H.T.E. Teo. MUlti-Stage Ignition Compact thruster concept and testing. In *Proceedings of the 37th International Electric Propulsion Conference*, IEPC paper 2022-294, Cambridge, MA, 2022.

[4]G-C. Potrivitu, M. Laterza, D. Agarwal, X. Sun, and J.W.M. Lim. Performance and plume characterization of the MUlti-Stage Ignition Compact (MUSIC) Hall effect thruster. In *Proceedings of the 38th International Electric Propulsion Conference*, IEPC paper 2024-568, Toulouse, France, 2024.

[5]K.S. Khoo, M. Laterza, N. Pontianus, K.E.M. Ong, G-C. Potrivitu, J.W.M. Lim, P. Yli-Opas, H. Laurila, O. Ohls, E. Hanski, M. Sanroman, A. Tollet, J. Laitinen, and J. Sievinen. MUSIC Hall effect thruster and ARM resistojets as a Multi-modal Electric Propulsion Engine (MEPE): product concept, system design development, and flight qualification. In *Proceedings of the 9th Space Propulsion Conference*, SPC paper SP2024-232, Glasgow, UK, 2024.

[6]K.S. Khoo, M. Laterza, N. Pontianus, W.X.J. Ong, K.E.M. Ong, G-C. Potrivitu, J.W.M. Lim, P. Yli-Opas, H. Laurila, O. Ohls, E. Hanski, M. Sanroman, A. Tollet, J. Laitinen, and J. Sievinen. Flight & launch integration of the MUSIC Hall Effect Thruster and ARM Resistojets as a Multi-modal Electric Propulsion Engine (MEPE) on a 12 U satellite for the STRIDER mission. In *Proceedings of the 38th International Electric Propulsion Conference*, IEPC paper 2024-576, Toulouse, France, 2024.

[7]G-C. Potrivitu, M. Laterza, S.Y.C. Gui, A. Chaudhary, M.H.A.B. Ridzuan, C. Teo, and J.W.M. Lim. Development of hollow cathodes for Hall effect thrusters at Aliena: design, ground testing and qualification fpr space. In *Proceedings of the 9th Space Propulsion Conference*, SP paper 2024-068, Glasgow, UK, 2024.

[8]M. Laterza, K. S. Khoo, W.J.J. Lim, S.G. Ali, K.E.M Ong, D. Agarwal, J.E. Lim, G-C. Potrivitu, and J.W.M. Lim. Development of a compact xenon propellant management assembly for low-power Hall effect thrusters: system design, hardware prototype, and pressure qualification. In *Proceedings of the 9th Space Propulsion Conference*, SPC paper SP2024-097, Glasgow, UK, 2024.

[9]N. Pontianus, W.X.J. Ong, M. Laterza, Lin Y., G-C. Potrivitu, and J.W.M. Lim. Power processing and electronic control units for sub-100 W Hall effect thrusters: design and qualification for space. In *Proceedings of the 9th Space Propulsion Conference*, SPC paper SP2024-231, Glasgow, UK, 2024.

Copyright 2024 by the Electric Rocket Propulsion Society. All rights reserved.